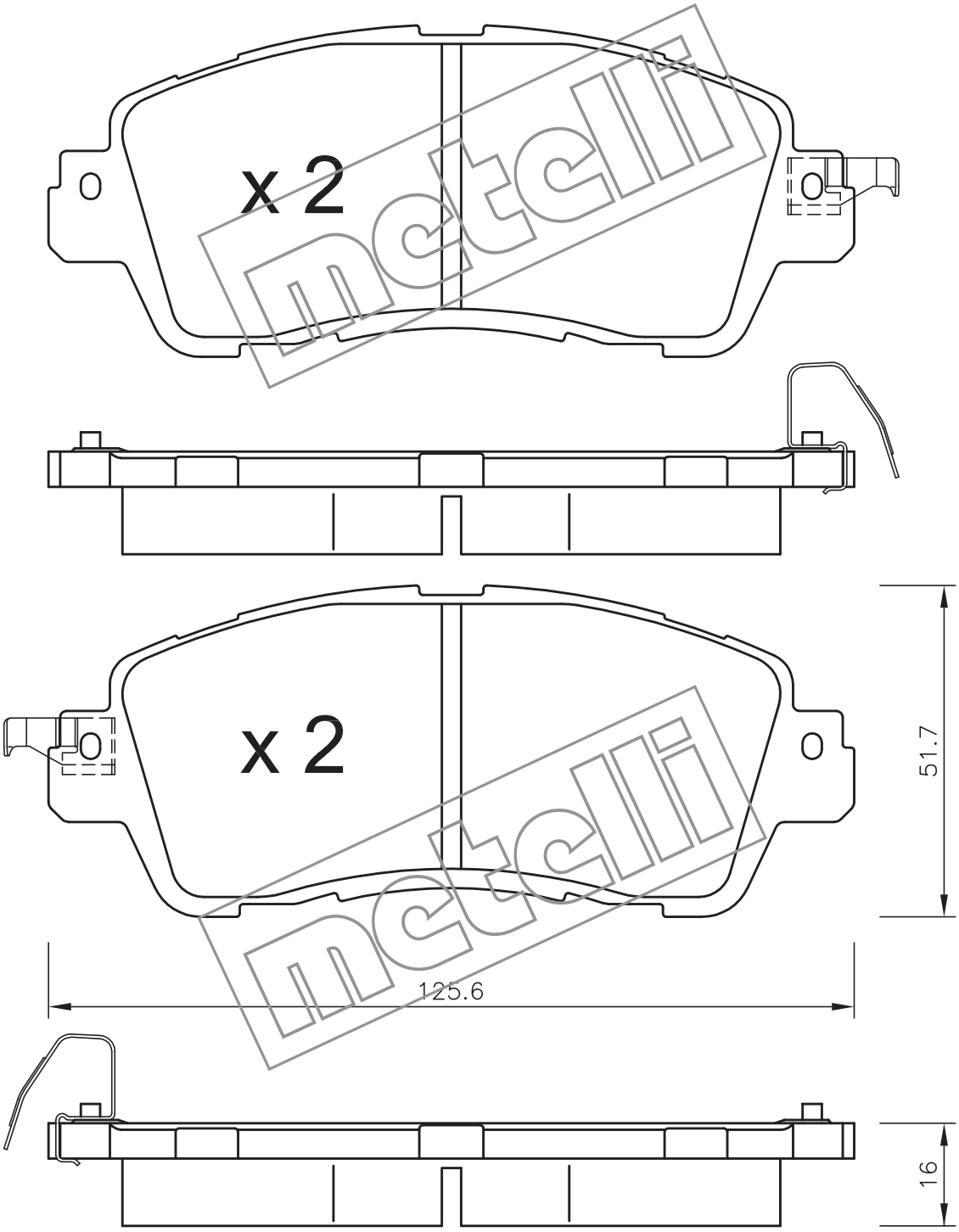
x 2
x 2
51.7
125.6
16