| No | Denomination | Pcs. | Drawing No | Material | Coating | Coating Thick. |
|---|---|---|---|---|---|---|
| 1 | Air Spring Bellows | 1 | RML 73608 | NR/BR. | —— | —— |
| 2 | Top Plate | 1 | 0387 | DD13 (6224). TS EN 10111. | Fe/Zn/C CHROME3. (Yellow Pass.) | 8-30µ |
| 3 | Metal Piston | 1 | 4183 | DD13 (6224). TS EN 10111. | ELECTRO STATIC POWDER COATING (BLACK) | 80-120µ |
| 4 | Piston Pin | 1 | 4185 | 35 S 20 (8.8 Quality) | Fe/Zn/C CHROME3. (Yellow Pass.) | 8-30µ |
| 5 | Bottom Plate | 1 | 4186 | DD13 (6224). TS EN 10111. | 1. ply 5-12 µ Chemosil 211 NL ( Grey )<br>2. ply 10-15 µ Chemosil 411NL ( Black ) | —— |
| 6 | Nuts With Nylon Insert | 1 | M16 (din985) | Quality 8.8 | Fe/Zn/C CHROME3. (Yellow Pass.) | 8-30µ |
| 7 | Split Pin | 2 | —— | spring steel | Fe/Zn/C CHROME3. (Yellow Pass.) | 8-30µ |
| 8 | Bulding Plug | 1 | T018 (M22) | Ld-Pe. | —— | —— |
| 9 | Label | 1 | RML 73608 C | Polyester foil | —— | —— |

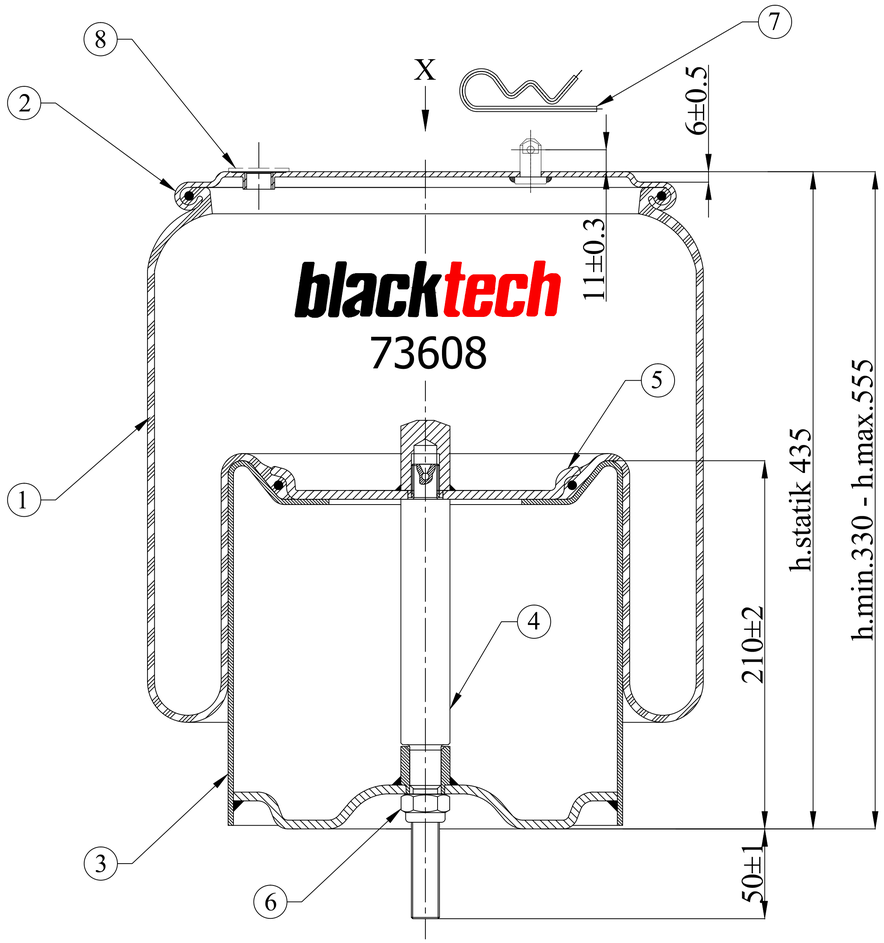


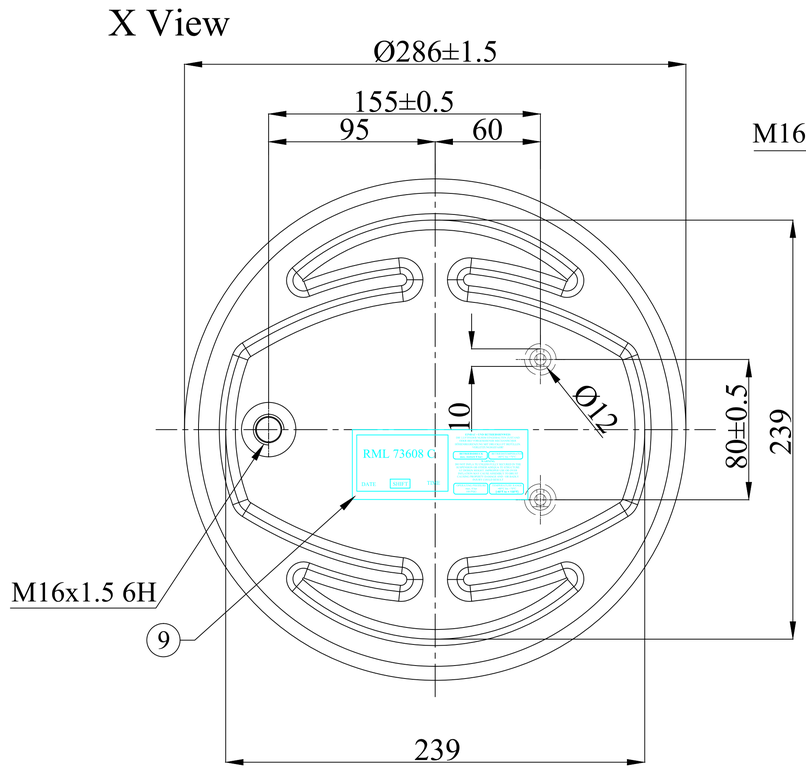


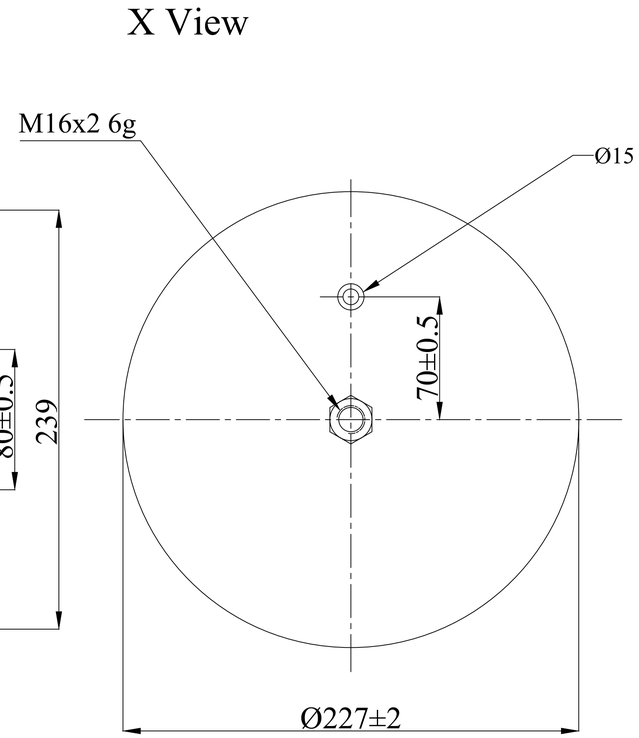


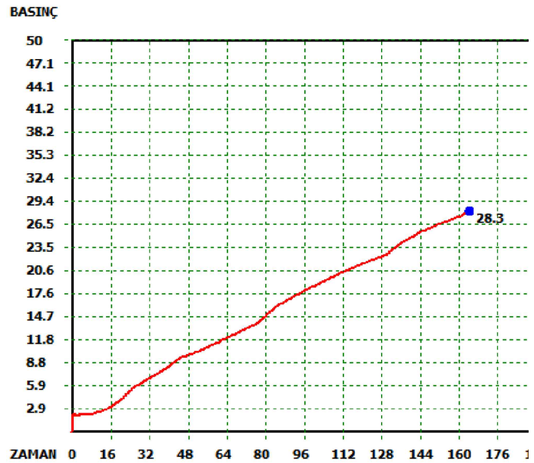


| | | | |
|---|---|---|---|
| Item no: | Item name: | Weight : 12,7kg | Item feature and explanation: |
| Scale: 1/1 | RML 73608 C PRODUCT DRAWING | General tolerance: ISO 2768-C | First issue date: 13.11.2013 |
| | | Drawing no: AGS.E.5377 - 73608 C | Version no: 00 |
| Drawn by: | S.YILMAZ | | |
| Checked by: | A.YÜKSEL | | |
| Approved by: | B.ÖZAY | | |

Vibracoustic CV Air Springs

This document is the property of VIBRACOUSTIC CV AIR SPRINGS OTOMOTİV SANAYİ VE TİCARET A.Ş. No part of this document may be copied, reproduced, used or distributed in any way to any other persons, without VIBRACOUSTIC CV AIR SPRINGS OTOMOTİV SANAYİ VE TİCARET A.Ş.'s express prior written consent. All rights reserved.

A3

CAD

| V.No | Date: | Explanation: |
|---|---|---|
| | | |

Version explanation: