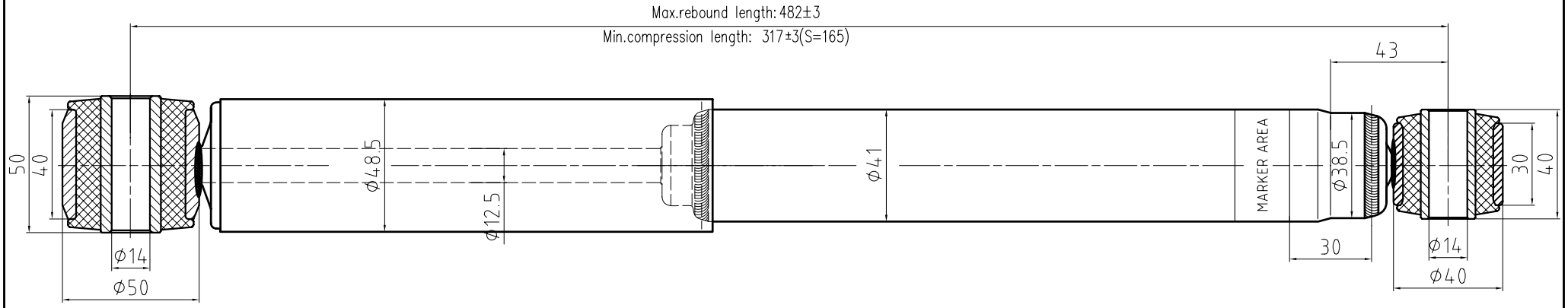

ADD damping force specification HYDRAULIC

V(m/s)	0.079	0.314	0.520
Rebound(N)	545	1805	2295
Compression(N)	395	1140	1485
S(mm)	60		

					WEIGHT (kg)			
					REV.	A		
					SCALE		CUST No.	344803
					FIRST ANGLE PROJECTION		ADD No.	
LTR.	REVISIONS	CHK'D	E.C.O	DATE			DRAWING No.	AGN30811
SHOCK ABSORBER DRAWING								
DRAWING Long Ye	CHECKED	APPROVED Yingying Chen	DATE 07/09/2017		ADD INDUSTRY CO.,LTD 浙江正裕工业有限公司			