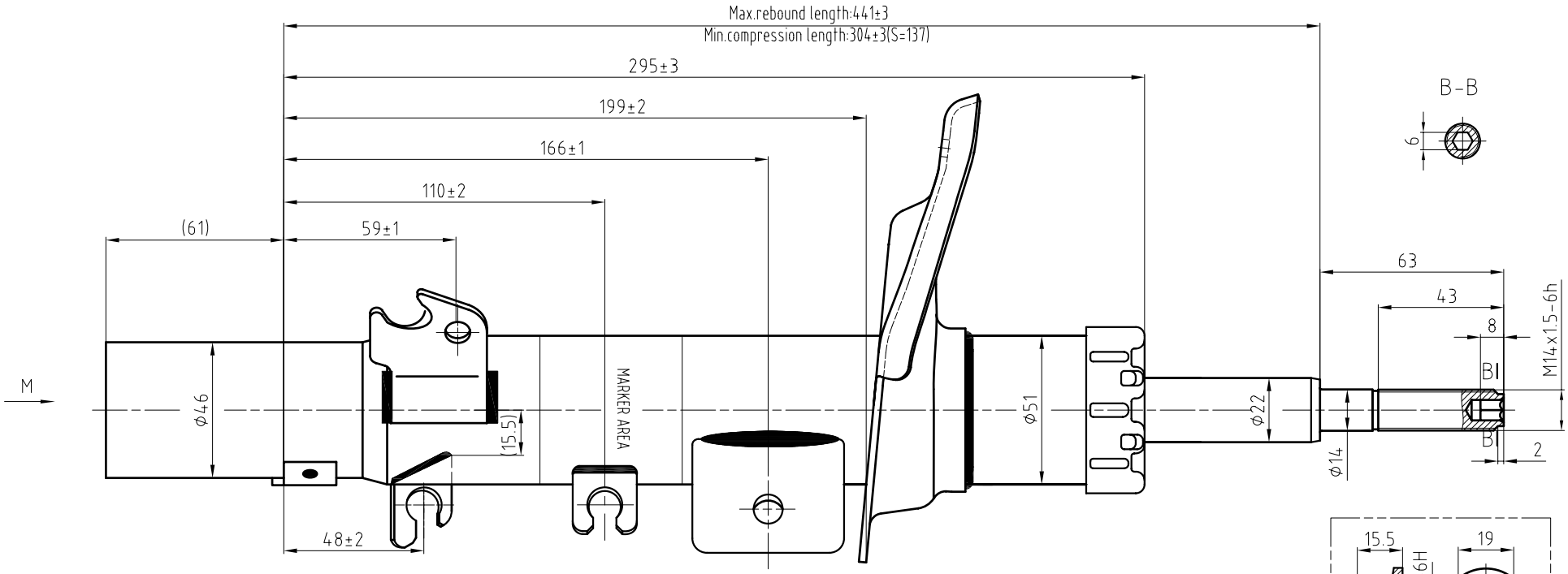

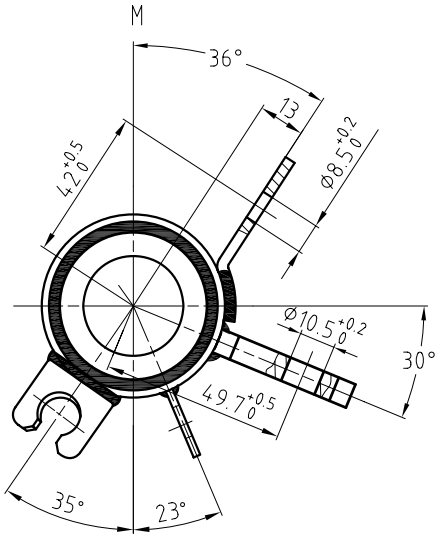

					WEIGHT (kg)			
					REV.	A		
					SCALE		CUST No.	339708
					FIRST ANGLE PROJECTION		ADD No.	474458
LTR.	REVISIONS	CHK'D	E.C.O	DATE			DRAWING No.	DGN42788

SHOCK ABSORBER DRAWING

DRAWING	CHECKED	APPROVED	DATE
Yan Wu		Yingying Chen	04/18/2013

ADD INDUSTRY CO.,LTD 浙江正裕工业有限公司